Fernco Inc.
300 S. DAYTON ST.
DAVISON, MI 48423
PH: 810-653-9626
FAX:810-654-2616

1003-64

DESCRIPTION:

6" Clay to 4" AC/DI

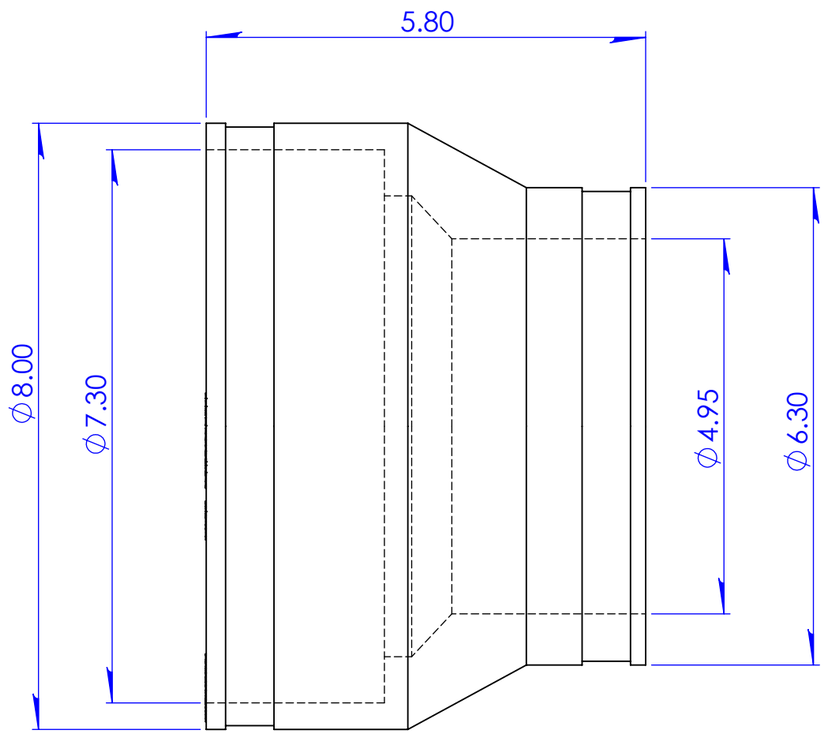

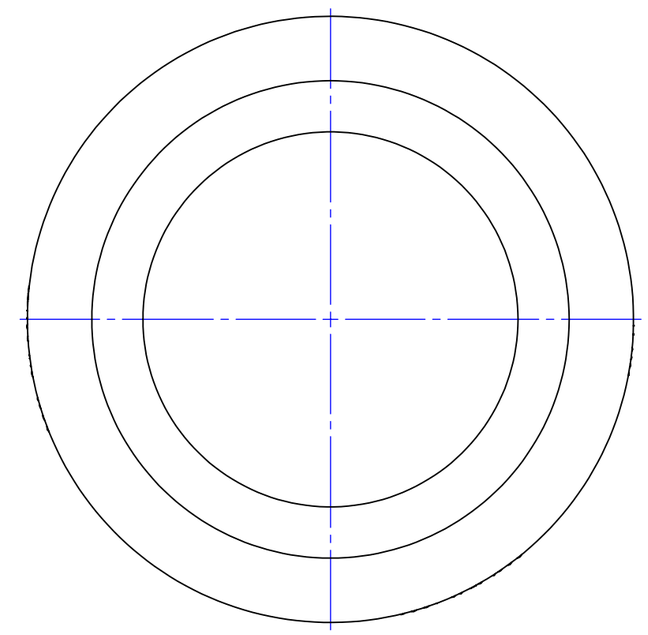

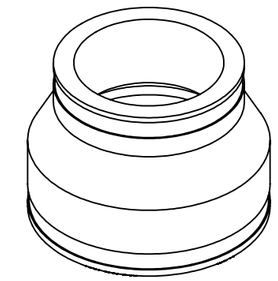

Note:

PROPRIETARY AND CONFIDENTIAL
THE INFORMATION CONTAINED IN THIS DRAWING IS THE SOLE PROPERTY OF FERNCO, INC. ANY REPRODUCTION IN PART OR AS A WHOLE WITHOUT THE WRITTEN PERMISSION OF FERNCO, INC. IS PROHIBITED.

TOLERANCES:
Fractional ± 1/4"
.XX= ±.06
ANG.= ±3°
UNLESS OTHERWISE SPECIFIED

Part Weight	3.30 lbs	Installation Torque	60 in lbs
Min/Max Temp.	-30/140 Degrees F		D5926
Pressure Tested		Clamps used	300 Series Stainless
Material	Flexible PVC 60 Duro Shore A	Box Quantity	

UNITS: INCHES
SIZE: A
3RD ANGLE PROJECTION
DO NOT SCALE DRAWING

DESIGNER: N. Goddard
CHECKER: THO
DATE: 10/21/2016
SCALE: not to scale
SHEET 1 OF 1